KONTI HIDROPLAST®

PRODUCTION OF POLYETHYLENE AND POLYPROPYLENE PIPES

POLYETHYLENE SEWAGE PIPES

KONTI KAN

www.konti-hidroplast.com.mk

CONTENTS

INTRODUCTION 2

KONTI KAN POLYETHYLENE PIPES 5

TECHNICAL CHARACTERISTICS OF THE PIPE 6

FLOW RATE TABLE FOR PIPE FILLING OF 95% 9

GRAVITY PIPE CONNECTIONS 10

COLOUR 12

PRODUCTION CONTROL 12

CHEMICAL AND ELECTROMECHANICAL RESISTANCE 12

INSTALLATION AND POSITIONING IN A TRENCH 13

PACKING AND TRANSPORT 14

STANDARDS 15

KONTI KAN FITTINGS 17

CERTIFICATES 32

LABORATORY TESTING 33

KONTI HIDROPLAST®

WELCOME TO OUR WORLD

Konti Hidroplast is part of the world's largest manufacturer and supplier of high performance plastic pipes and offers the best and the most cost effective pipe systems for its customers.

Konti Hidroplast specialises in polyethylene pipe systems for gas and water transportation in the utilities and industrial markets.

MARKET ORIENTED

Konti Hidroplast products find a broad range of applications in the industrial and utilities market on a worldwide scale.

The water and gas distribution enterprises are important sectors for high integrity products where the maintenance of water quality and the safe transport of gaseous fuels are of paramount importance.

Industrial applications include alternative energy installations in landfill gas systems to effluent transportation and mineral slurry.

Products are widely used in pipeline installation, repair and maintenance.

Many of the brands in the Konti Hidroplast portfolio have a long record of innovation in meeting the needs of the water and gas utilities.

Being one of the foremost pioneers in polyethylene pipe systems, Konti Hidroplast is continually improving and updating its offer to meet the ever growing needs of the distribution engineer, ensuring they stay at the forefront of world gas and water distribution/treatment systems.

CUSTOMER FOCUS

The key to our success lies in the commitment to provide the highest quality service and support. We are a team of highly motivated and experienced individuals.

We place the utmost importance on meeting the needs of our customers, constantly evolving our extensive product portfolio to meet the ever changing demands of the water and gas utilities, industrial and foreign markets.

QUALITY

Konti Hidroplast is a result-driven busines – its people, products and service. Designed, manufactured and supplied under EN ISO 9001:2000 accredited Quality Management Systems, Konti Hidroplast products comply with relevant national, European and international product standards to ensure complete reliability for our customers.

Besides the ISO certificates for Quality Management Systems and ecology, the gas pipes are also certified by DVGW CERT GmbH.

THE ENVIRONMENT

Committed to sustainable manufacture and systems, Konti Hidroplast operates and maintains an environmental policy fully accredited by ISO 14001.

KONTI KAN POLYETHYLENE PIPES

KONTI KAN polyethylene pipes are profiled, double wall pipes with outside corrugate and inside smooth surface.

Application:

- Atmospheric and fecal sewerage
- Drainage
- Protection of optical cables
- Protection of telephone cables

The profile of the double wall corrugate KONTI KAN pipe is made of:

- OD: outside diameter, standardized according to EN 13476-3
- ID: inside diameter, with a higher value than the standard thickness
- e_5: minimal standard thickness
- P: pitch

KONTI KAN rib has the traditional half rounded structure, entirely retaining the attributes for integration and continuity between internal thickness and the rib.

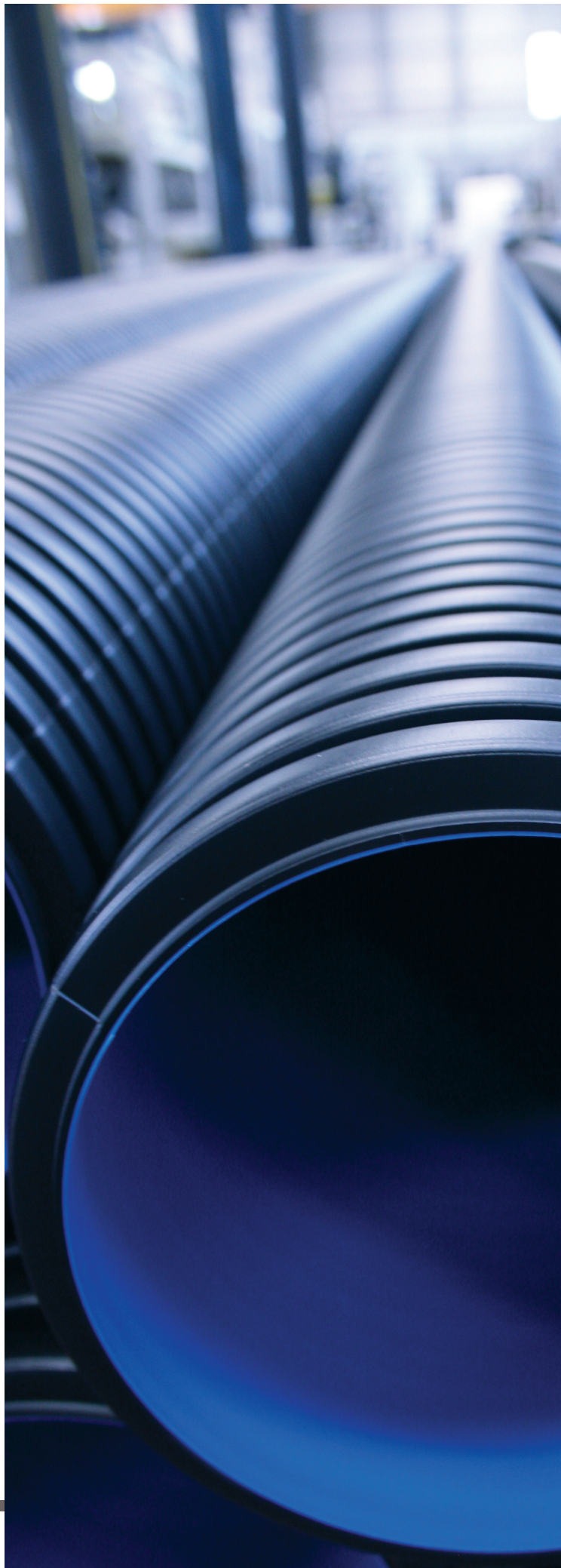

TECHNICAL CHARACTERISTICS OF THE PIPE

According to the EN 13476-3 standard the sewerage pipes resistance to external load-ring stiffness (SN) is of great importance.

The pipe resistance is a feature characteristic for elastic pipes and represents a relation between geometric data and material characteristics.

Technically, the pipe's ring stiffness is defined as:

$$SN = EI / Dm^3$$

Where:

E – module of elasticity, in Pa

Dm – mean pipe diameter, in m

I – moment of inertia, in m^4/m

Standard pipe classes according to ISO9969 have ring stiffness of SN 2; 4; 8 and 16 KN/m^2.

MODULE OF ELASTICITY

The value of the module of elasticity E on rigid pipes is much higher than on plastic pipes.

Example: The value for reinforced cement is 2.5x104 MPa, for concrete it is 3x 104 MPa, for vitrified clay 5x104 MPa, for cast iron 10x104 MPa and for ductile iron it is 17x104 MPa, whilst for PVC the mean values are 3.6x103 MPa and 1.0x103 MPa for HDPE.

MOMENT OF INERTIA

The second term which has an influence on the ring stiffness of the pipes is the moment of inertia on the wall (I).

To get the ring stiffness at the appropriate volume for pipes with low values of E, the moment of inertia of the pipe wall should be affected 1-s^3/12, i.e. its thickness.

THERMAL EXPANDING

According to the standard EN13476-3, the pipes and the fittings are resistant to temperature in accordance to the indicators under the form EN 476.

In general, PE has a linear thermal expanding factor of (1.7±2)10-4C-1. Normally, the structural pipe has linear internal expanding lower than materials and pipes with smaller walls. This is based on the fact that structure has the same values for the expanding factor for all the elongated surfaces, but the expanding and shrinking are partly stopped (reduced) as a result of the elements of the structure itself and they mainly appear in radial direction.

In a laboratory research it has been proven that tested specimens of KONTI KAN pipes have shown approximately 50% lower elongation than the extruded standard PE pipes.

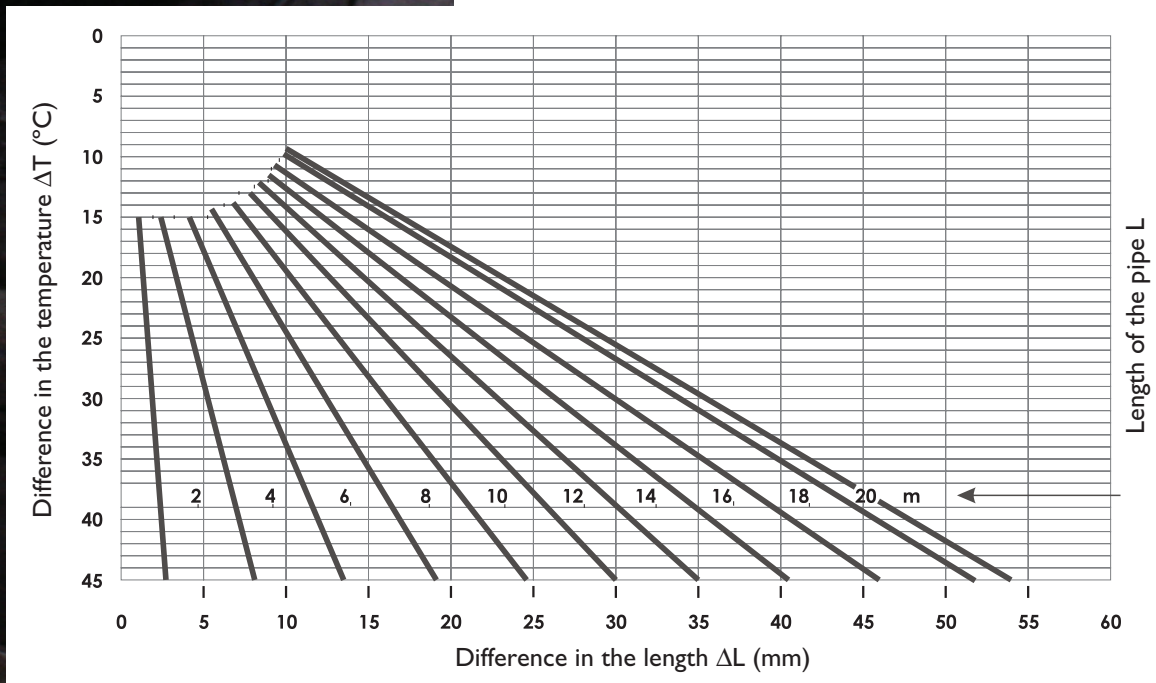

DIMENSIONS

The dimensions presented in the table are indicative and they are applicable in the designated class.
The values are mean for the process of manufacture.

DIMENSION (MM) FOR CLASS SN4* BY ISO9969

*SN4 is a pipe class for light and medium traffic load.

DN/OD	DIAMETER TOLERANCE	ID	H	e_5	e_4	P	L_1	L_2
110	+/- 2%	93.80	8.1	0.5	1.6	11.5	6.5	3
125	+/- 2%	107	9	0.6	1.7	12.5	8.5	4.5
140	+/- 2%	122	9.3	0.7	1.8	13.5	9.8	3.6
160	+/- 2%	138	11	0.7	1.9	17	12.5	4.5
200	+/- 2%	176	12	0.8	2.1	23	16	7
250	+/- 2%	221	14.5	1.3	3.0	27	20	7
315	+/- 2%	275	20	1.5	3.2	34.5	26	8.5
400	+/- 2%	348	26	1.8	4.3	40.6	30.1	10.5
500	+/- 2%	432	34	1.9	4.6	52	39	13
630	+/- 2%	550	42	2.3	4.8	66	54	12
800	+/- 2%	693	53.5	2.6	5.0	75	61	14
1000	+/- 2%	860	70	2.9	7.0	105	86	19

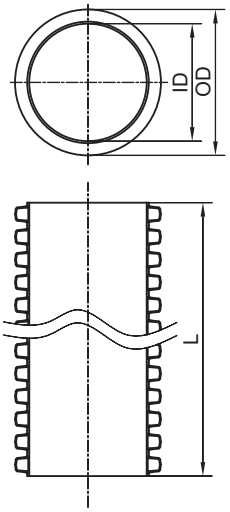

DIMENSION (MM) FOR CLASS SN8* BY ISO9969

*SN8 is a pipe class for heavy traffic load.

DN/OD	DIAMETER TOLERANCE	ID	H	e_5	e_4	P	L_1	L_2
110	+/- 2%	93.80	8.1	0.9	2.1	11.5	6.5	3
125	+/- 2%	107	9	1.0	2.3	12.5	8.5	4.5
140	+/- 2%	122	9.3	1.1	2.3	13.5	9.8	3.6
160	+/- 2%	138	11	1.1	2.3	17	12.5	4.5
200	+/- 2%	176	12	1.2	2.5	23	16	7
250	+/- 2%	221	14.5	1.7	3.6	27	20	7
315	+/- 2%	275	20	1.9	3.8	34.5	26	8.5
400	+/- 2%	348	26	2.2	4.9	40.6	30.1	10.5
500	+/- 2%	432	34	2.3	5.2	52	39	13
630	+/- 2%	550	42	2.7	5.4	66	54	12
800	+/- 2%	693	53.5	3.0	5.6	75	61	14
1000	+/- 2%	860	70	3.3	7.6	105	86	19

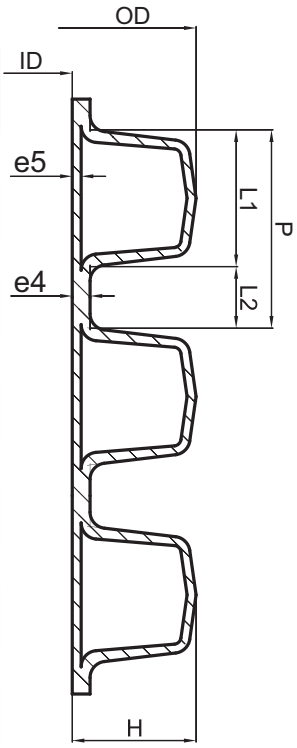

FLOW RATE TABLE FOR PIPE FILLING OF 95%

FLOW CALCULATION

Flow: Q= A*C*R 1/2*I1/2 (1/sec)

Chezy coefficient: C= 1/n*R2/3*I1/2

Q= A*1/n*R2/3*I1/2

Where:

A – circular section of the pipe (m^2)

R – hydraulic radius (m)

I – slope of trench (mm)

R – hydraulic radius for full pipe (= ID/4)

VELOCITY CALCULATION

Velocity: V= C*R1/2*I1/2 (m/s)

C= 1/n*R2/3*I1/2

V= 1/n*R2/3*I1/2

Where:

R – hydraulic radius(m)

R – hydraulic radius for full pipe (=ID/4)

I – slope of trench (mm)

Manning number n=0.010

SLOPE	DN/OD	110	160	200	250	315	400	500	630	800	1000
m/m	ID	93	138	176	216	271	343	432	550	693	860
1/1000	Q (l/s)	1.80	5.23	10.00	17.27	31.62	59.27	109.66	208.79	386.69	687.71
0.001	V (m/s)	0.25	0.32	0.38	0.44	0.51	0.59	0.69	0.81	0.95	1.10
2/1000	Q (l/s)	2.54	7.40	14.15	24.42	44.72	83.83	155.08	295.27	546.86	972.56
0.002	V (m/s)	0.35	0.46	0.54	0.62	0.72	0.84	0.98	1.15	1.34	1.55
3/1000	Q (l/s)	3.12	9.06	17.32	29.91	54.77	102.66	189.93	361.63	669.77	1191.14
0.003	V (m/s)	0.43	0.56	0.66	0.76	0.88	1.03	1.20	1.41	1.64	1.90
4/1000	Q (l/s)	3.60	10.46	20.01	34.54	63.24	118.55	219.31	417.58	773.38	1375.41
0.004	V (m/s)	0.50	0.65	0.76	0.87	1.02	1.19	1.39	1.63	1.90	2.19
5/1000	Q (l/s)	4.02	11.69	22.37	38.62	70.71	132.54	245.20	466.87	864.67	1537.76
0.005	V (m/s)	0.55	0.72	0.85	0.98	1.14	1.33	1.55	1.83	2.12	2.45
6/1000	Q (l/s)	4.41	12.81	34.50	42.30	77.46	145.19	268.60	511.43	947.19	1684.53
0.006	V (m/s)	0.61	0.79	0.93	1.07	1.24	1.46	1.70	1.99	2.33	2.69
7/1000	Q (l/s)	4.76	13.83	26.46	45.69	83.67	156.82	290.12	552.41	1023.09	1819.50
0.007	V (m/s)	0.66	0.86	1.01	1.16	1.34	1.57	1.83	2.15	2.51	2.90
8/1000	Q (l/s)	5.09	14.79	28.29	48.85	89.44	167.65	310.15	590.55	1093.72	1945.13
0.008	V (m/s)	0.70	0.92	1.08	1.23	1.44	1.68	1.96	2.30	2.69	3.10
9/1000	Q (l/s)	5.40	15.69	30.01	51.81	94.87	177.82	328.97	626.37	1160.07	2063.12
0.009	V (m/s)	0.74	0.97	1.14	1.31	1.52	1.78	2.08	2.44	2.85	3.29
10/1000	Q (l/s)	5.69	16.54	31.63	54.61	100.00	187.44	346.76	660.25	1222.82	2174.52
0.01	V (m/s)	0.78	1.02	1.20	1.38	1.61	1.88	2.19	2.57	3.00	3.47
15/1000	Q (l/s)	6.97	20.25	38.74	66.89	122.47	229.57	424.70	808.64	1497.64	2663.47
0.015	V (m/s)	0.96	1.25	1.48	1.69	1.97	2.30	2.68	3.15	3.68	4.25
20/1000	Q (l/s)	8.05	23.39	44.73	77.23	141.42	265.08	490.40	933.74	1729.33	3075.52
0.02	V (m/s)	1.11	1.45	1.70	1.95	2.27	2.66	3.10	3.64	4.25	4.90
30/1000	Q (l/s)	9.86	27.63	54.79	94.59	173.20	324.65	600.61	1143.59	2117.99	3766.72
0.03	V (m/s)	1.36	1.71	2.09	2.39	2.78	3.25	3.80	4.46	5.20	6.01
40/1000	Q (l/s)	11.38	31.90	63.26	109.22	200.00	374.88	693.50	1320.50	2445.64	4349.44
0.04	V (m/s)	1.57	1.98	2.41	2.76	3.21	3.76	4.38	5.15	6.01	6.94
50/1000	Q (l/s)	12.72	35.67	70.73	122.12	223.60	419.13	775.39	1476.37	2734.31	4862.82
0.05	V (m/s)	1.75	2.21	2.69	3.09	3.59	4.20	4.90	5.76	6.72	7.76

GRAVITY PIPE CONNECTIONS

IN-SITU CONNECTIONS WITH EXISTING COLLECTOR / MANHOLE

Dimensions of In-Situ connections

OD / ID	DIAMETAR OF KNIFE (mm)
OD 110	114
ID 110	125
OD 160	166
ID 160	193
OD 200	208
ID 200	240
OD 250	262
ID 250	295
OD 315	337
ID 300	355

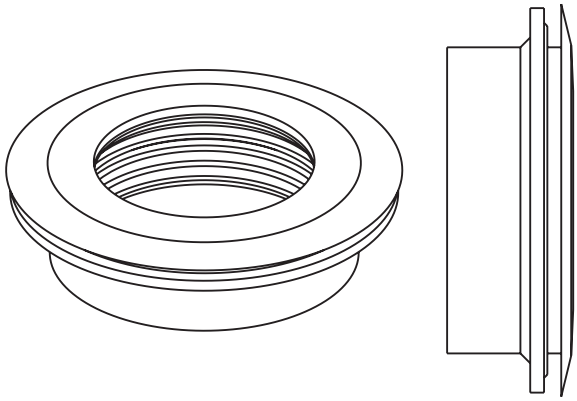

IN-SITU CONNECTOR SHOULD BE USED FOR MAKING CONNECTION WITH COLLECTOR OR MANHOLE.

Proceed as follows:

1. Define connection diameter

2. Cut suitable hole in the manhole wall

3. Place In-Situ connector in the hole

4. Insert connection pipe in the rubber In-Situ connector

1

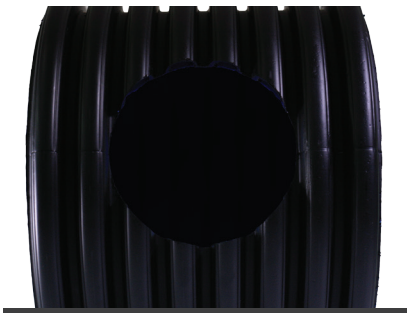

2

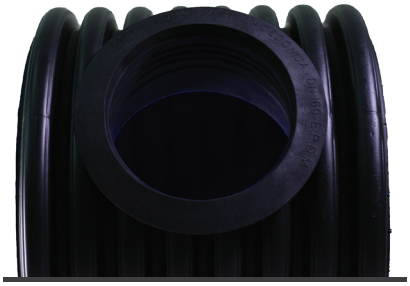

3

4

KONTI KAN pipes with dimensions of Ø110-315mm connect with specially designed sockets with rubber gasket which ensure full two-way waterproofing.

KONTI KAN pipes with dimensions of Ø400-1000mm have inline integrated socket and they can be connected with one rubber gasket which ensures full two-way waterproofing.

INSTALLATION INSTRUCTIONS FOR Ø110-315mm

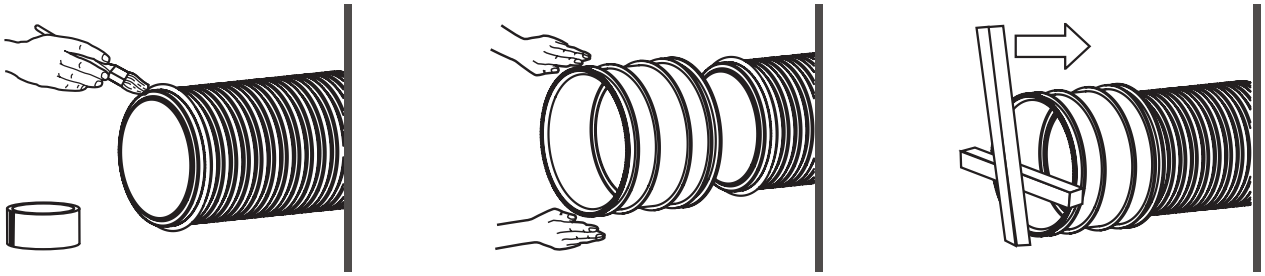

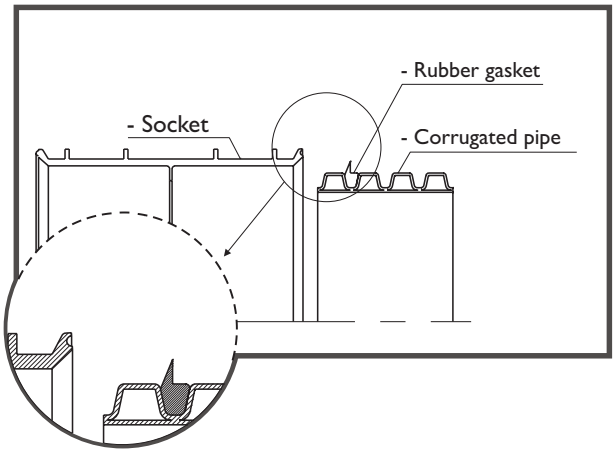

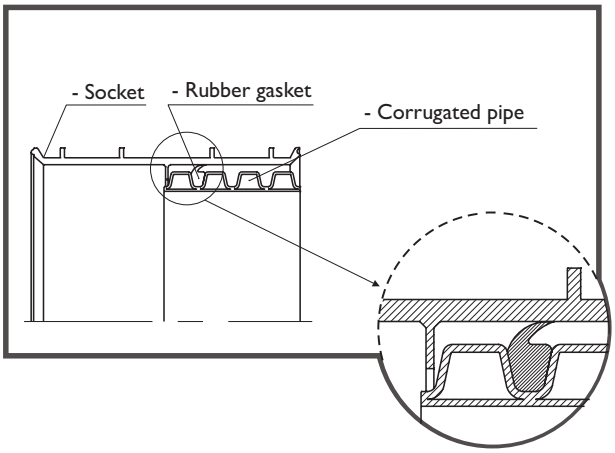

INSTALLATION INSTRUCTIONS FOR Ø400-1000mm

1

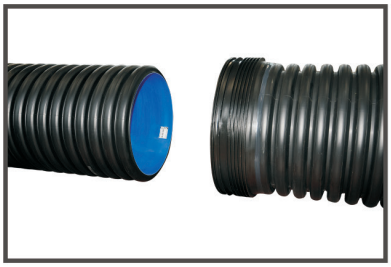

2

3

4

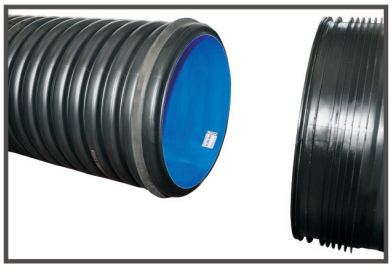

5

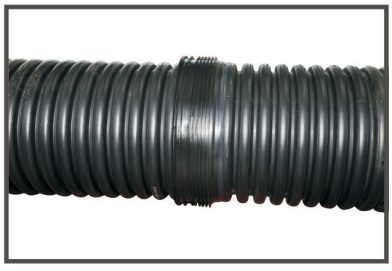

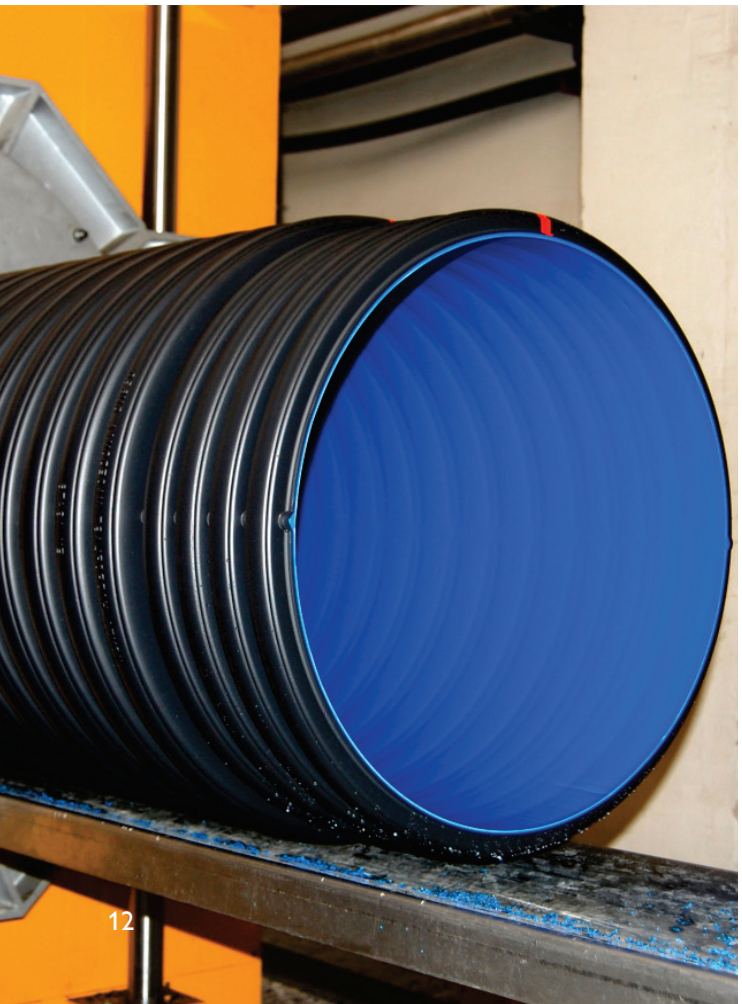

COLOUR

Outer layer – black colour with a characteristic orange line lengthwise the pipe.

Inner layer – blue or turquoise.

PRODUCTION CONTROL

All KONTI KAN products are constantly controlled in the laboratory.

Their characteristics are indicated in the product certificates and cover the requirements of EN13476-3.

CHEMICAL AND ELECTROMECHANICAL RESISTANCE

The resistance of PE to chemical aggression is well known.

The characteristics are examined in EN 13476-3, which confirms that PE materials are resistant to waters with a wide range of Ph values, such as domestic waste waters, rain water, surface and ground waters.

The list of chemical resistance of KONTI KAN pipes can be delivered at the request of the customers.

INSTALLATION AND POSITIONING IN A TRENCH

The installation of pipe, positioning in a trench and testing of pipeline is performed according to the EN1610 standard.

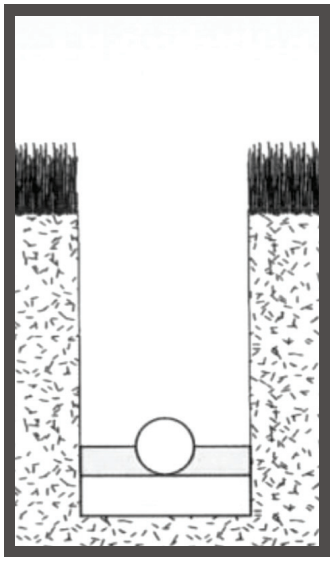

The side earth filling is done by hand up to half the pipe diameter and compacted by trampling with the heel of the foot.

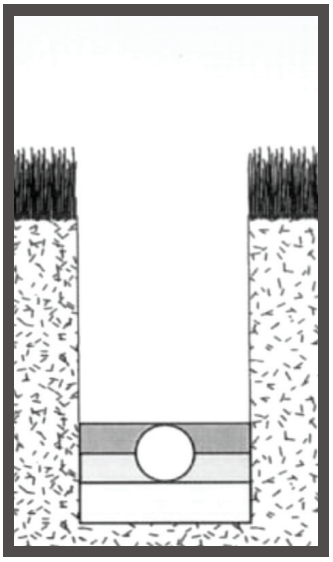

Filling up to the crown of the pipe, placed by hand and again compacted by foot.

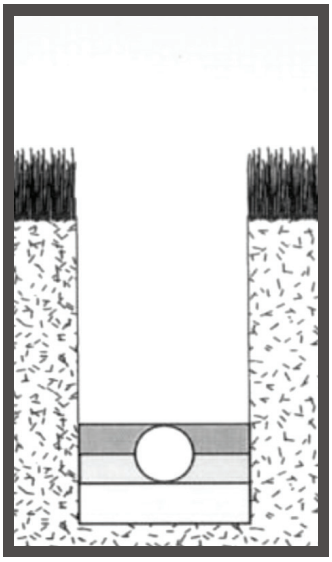

The third layer can be placed and compacted by means of a machine, up to 150 mm from the crown of the pipe but not compacted directly over the crown of the pipe.

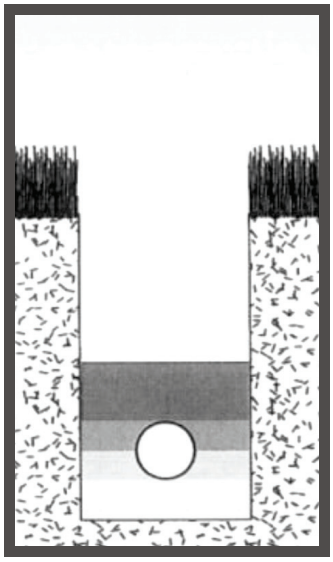

Sidefill and backfill to 150 mm above the crown can be placed in one pass when free flowing granular material (3A) is used.

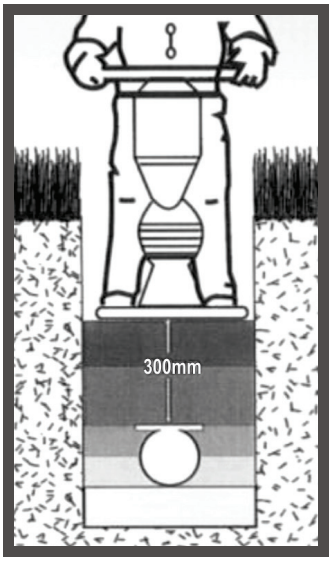

If the dug material for the remainder of the backfill can be placed and compacted, this can be done in layers not greater than 250mm of thickness. However, this is not done directly over the pipe, but after 300mm have been placed.

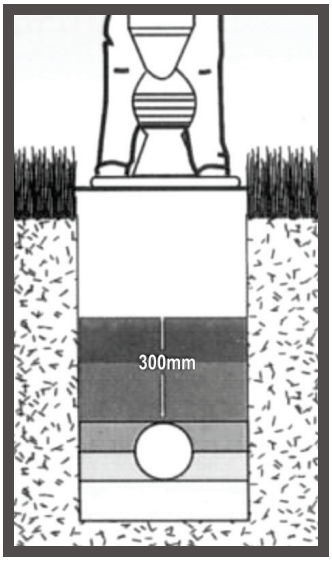

The remainder of the backfill can be placed and compacted in layers depending on the required surface finish.

PACKING AND TRANSPORT

The corrugated pipes KONTI KAN are manufactured with minimal length of 6, 8 and 12 meters.

Results show that properly stored and unused pipes can be used after 100 years without any problems. The only fault appears if they are stored at high temperatures since the pipes can undergo distortion.

When they are placed on the ground, care should be taken not to place them on sharp rocks/stones.

When they are loaded or unloaded off a truck, there should be no sharp edges that could damage the pipes.

The best method for storage and transport is placing the pipes on a flat surface and preventing contact between the pipes among their whole length. The storage surface should be well cleaned.

STANDARDS

All examinations and observations have been based on the EN 13476-3 standard.

EN 13476-1	PART1 – GENERAL REQUIREMENTS AND PERFORMANCE CHARACTERISTICS
EN 13476-3	PART 3 – SPECIFICATIONS FOR PIPES AND FITTINGS WITH SMOOTH INTERNAL AND PROFILED EXTERNAL SURFACE AND THE SYSTEM, TYPE B
EN 13476-4	PART 4 – ASSESSMENT OF CONFORMITY
EN 744 -	PLASTICS PIPING AND DUCTING SYSTEM – THERMOPLASTIC PIPES – TEST METHOD FOR RESISTANCE TO EXTERNAL BLOW BY ROUND – THE-CLOCK METHOD
EN 1053 -	THERMOPLASTICS PIPING SYSTEM FOR NON PRESSURE APPLICATIONS – TEST METHOD OF WATERTIGHTNESS
EN 1277	PLASTICS PIPING SYSTEMS – THERMOPLASTICS PIPING SYSTEM FOR NON PRESSURE APPICATIONS – TEST METHOD OF LEAKTIGHTNESS OF ELASTOMERIC SEALING RING TYPE JOINTS
EN ISO 9969	THERMOPLASTICS PIPES – DETERMINATION OF RING STIFNESS
EN ISO 9967	PLASTICS PIPES – DETERMINATION OF CREEP RATIO
ISO 12091	STRUCTURED WALL THERMOPLASTICS PIPES – OVEN TEST
ISO 13967	THERMOPLASTICS FITTINGS – DETERMINATION OF RING STIFFNESS
EN 681-2	ELASTOMERIC SEALS – MATERIAL REQUIREMENTS FOR PIPE JOINTS SEALS USED IN WATER AND DRAINAGE APPLICATIONS – PART 2: THERMOPLASTIC ELASTOMERS
EN 1610	CONSTRUCTION AND TESTING OF DRAINS AND SEWERS

KONTI KAN FITTINGS

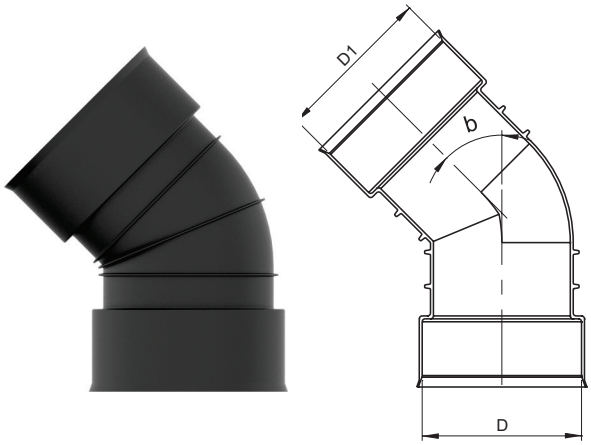

INJECTION MOLDING ELBOW			
HDPE "OD"			
ELBOW	DIMENSIONS		
	D	D1	ß
	(mm)	(mm)	(º)
OD315	315	315	45
OD250	250	250	45
OD200	200	200	45
OD160	160	160	45
OD315	315	315	90
OD250	250	250	90
OD200	200	200	90
OD160	160	160	90

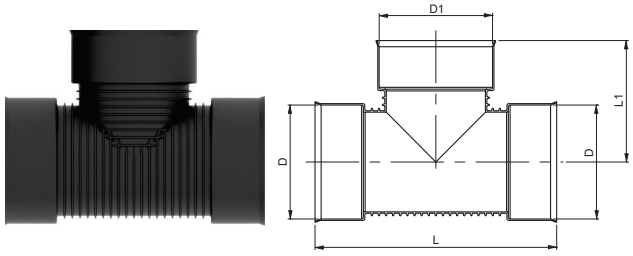

INJECTION MOLDING TEE				
HDPE "OD"				
TEE	DIMENSIONS			
	D	D1	L1	L1
	(mm)	(mm)	(mm)	(mm)
OD160	160	160	365	182
OD200	200	200	460	230
OD250	250	250	520	260
OD315	315	315	680	340

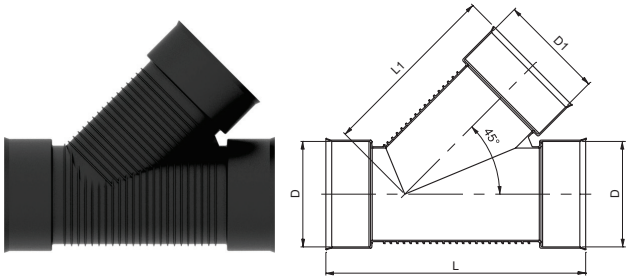

INJECTION MOLDING Y-BRANCH				
HDPE "OD"				
Y-BRANCH	DIMENSIONS			
	D	D1	L	L1
	(mm)	(mm)	(mm)	(mm)
OD160	160	160	430	230
OD200	200	200	538	366
OD250	250	250	634	438
OD315	315	315	790	597

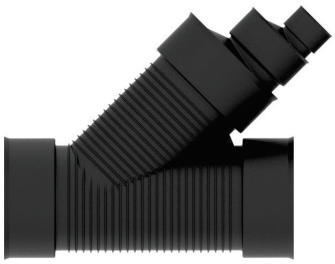

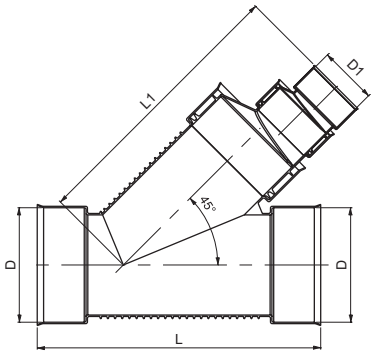

INJECTION MOLDING Y-BRANCH REDUCER				
HDPE "OD"				
Y-BRANCH REDUCER	DIMENSIONS			
	D	D1	L	L1
	(mm)	(mm)	(mm)	(mm)
OD315 x OD250	OD315	OD250	790	665
OD315 x OD200	OD315	OD200	790	675
OD315 x OD160	OD315	OD160	790	770
OD315 x OD110	OD315	OD110	790	770
OD250 x OD200	OD250	OD200	635	550
OD250 x OD160	OD250	OD160	635	655
OD250 x OD110	OD250	OD110	635	655
OD200 x OD160	OD250	OD160	535	470
OD200 x OD110	OD250	OD110	535	470
OD160 x OD110	OD160	OD110	430	400

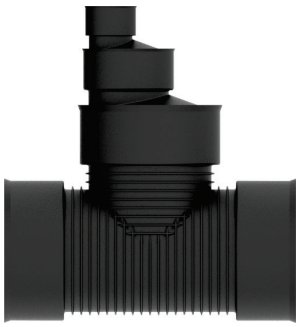

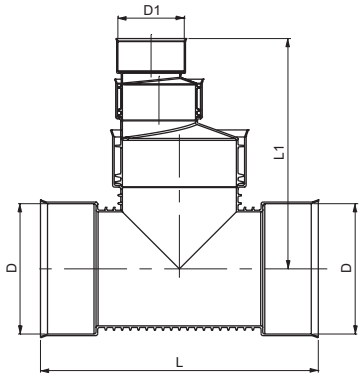

INJECTION MOLDING TEE REDUCER				
HDPE "OD"				
TEE REDUCER	DIMENSIONS			
	D	D1	L	L1
	(mm)	(mm)	(mm)	(mm)
OD315 x OD250	OD315	OD250	680	455
OD315 x OD200	OD315	OD200	680	465
OD315 x OD160	OD315	OD160	680	565
OD315 x OD110	OD315	OD110	680	570
OD250 x OD200	OD250	OD200	519	370
OD250 x OD160	OD250	OD160	519	475
OD250 x OD110	OD250	OD110	519	475
OD200 x OD160	OD250	OD160	460	330
OD200 x OD110	OD250	OD110	460	330
OD160 x OD110	OD160	OD110	366	287

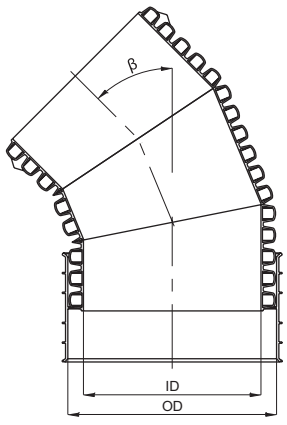

WELDED ELBOW			
HDPE "OD"			
ELBOW	DIMENSIONS		
	OD	ID	ß
	(mm)	(mm)	(º)
OD110	110	93	11
OD125	125	108	11
OD160	160	137	11
OD200	200	174	11
OD250	250	219	11
OD315	315	275	11
OD400	400	348	11
OD500	500	432	11
OD630	630	546	11
OD800	800	693	11
OD1000	1000	860	11

WELDED ELBOW			
HDPE "OD"			
ELBOW	DIMENSIONS		
	OD	ID	ß
	(mm)	(mm)	(º)
93	110	93	22
108	125	108	22
137	160	137	22
174	200	174	22
219	250	219	22
275	315	275	22
348	400	348	22
432	500	432	22
546	630	546	22
693	800	693	22
860	1000	860	22

WELDED ELBOW			
HDPE "OD"			
ELBOW	DIMENSIONS		
	OD	ID	ß
	(mm)	(mm)	(º)
93	110	93	30
108	125	108	30
137	160	137	30
174	200	174	30
219	250	219	30
275	315	275	30
348	400	348	30
432	500	432	30
546	630	546	30
693	800	693	30
860	1000	860	30

WELDED ELBOW			
HDPE "OD"			
ELBOW	DIMENSIONS		
	OD	ID	ß
	(mm)	(mm)	(º)
OD110	110	93	45
OD125	125	108	45
OD400	400	348	45
OD500	500	432	45
OD630	630	546	45
OD800	800	693	45
OD1000	1000	860	45

WELDED ELBOW			
HDPE "OD"			
ELBOW	DIMENSIONS		
	OD	ID	ß
	(mm)	(mm)	(º)
OD110	110	93	60
OD125	125	108	60
OD160	160	137	60
OD200	200	174	60
OD250	250	219	60
OD315	315	275	60
OD400	400	348	60
OD500	500	432	60
OD630	630	546	60
OD800	800	693	60
OD1000	1000	860	60

WELDED ELBOW			
HDPE "OD"			
ELBOW	DIMENSIONS		
	OD	ID	ß
	(mm)	(mm)	(º)
OD110	110	93	90
OD125	125	108	90
OD400	400	348	90
OD500	500	432	90
OD630	630	546	90
OD800	800	693	90
OD1000	1000	860	

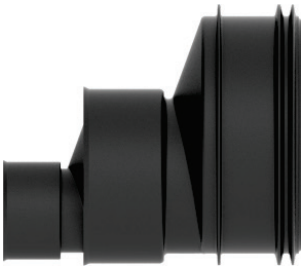

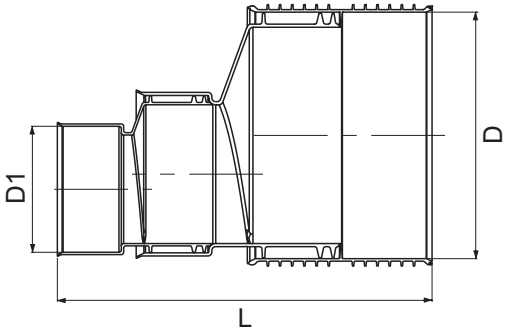

INJECTION MOLDING REDUCER			
HDPE "OD"			
INJECTION MOLDING REDUCER	DIMENSIONS		
	D	D1	L1
	(mm)	(mm)	(mm)
OD315 x OD250	OD315	OD250	380
OD315 x OD200	OD315	OD200	390
OD315 x OD160	OD315	OD160	490
OD315 x OD110	OD315	OD110	490
OD250 x OD200	OD250	OD200	330
OD250 x OD160	OD250	OD160	430
OD250 x OD110	OD250	OD110	430
OD200 x OD160	OD200	OD160	310
OD200 x OD110	OD200	OD110	310
OD160 x OD110	OD160	OD110	280

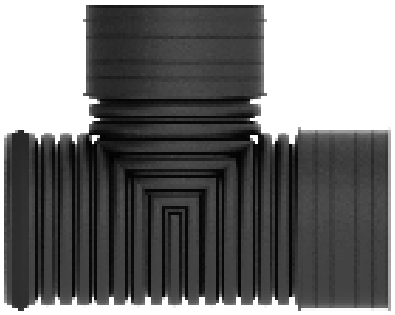

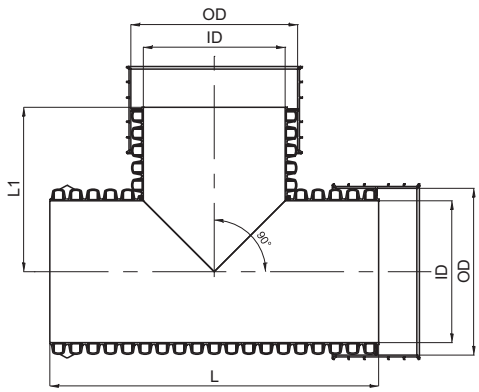

WELDED TEE				
HDPE "OD"				
TEE	DIMENSIONS			
	OD	ID	L	L1
	(mm)	(mm)	(mm)	(mm)
OD110	110	93	552	270
OD125	125	108	573	287
OD400	400	348	934	467
OD500	500	432	1054	501
OD630	630	546	1252	626
OD800	800	693	1357	566
OD1000	1000	860	1688	686

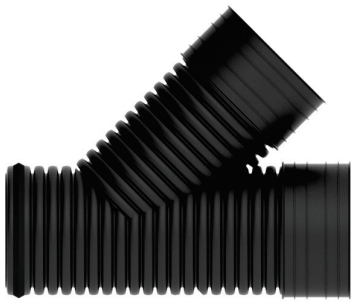

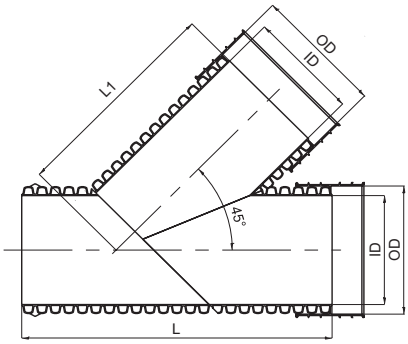

WELDED Y-BRANCH				
HDPE "OD"				
Y-BRANCH	DIMENSIONS			
	OD	ID	L	L1
	(mm)	(mm)	(mm)	(mm)
OD110	110	93	598	357
OD125	125	108	622,2	378
OD400	400	348	1096	771
OD500	500	432	1265	896
OD630	630	546	1516	1120
OD800	800	693	1810	1357
OD1000	1000	860	2110	1583

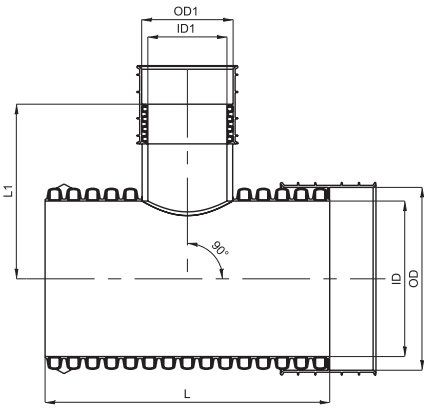

WELDED TEE REDUCER						
HDPE "OD"						
TEE REDUCER	DIMENSIONS					
	OD	ID	OD1	ID1	L	L1
	(mm)	(mm)	(mm)	(mm)	(mm)	(mm)
OD800XOD110	800	693	110	93	452	531
OD800XOD125	800	693	125	108	528	523
OD800XOD160	800	693	160	137	528	553
OD800XOD200	800	693	200	174	603	565
OD800XOD250	800	693	250	219	603	558
OD800XOD315	800	693	315	275	679	588
OD800XOD400	800	693	400	348	754	572
OD800XOD500	800	693	500	432	905	608
OD800XOD630	800	693	630	546	980	648
OD1000XOD110	1000	860	110	93	633	631
OD1000XOD125	1000	860	125	108	633	623
OD1000XOD160	1000	860	160	137	633	653
OD1000XOD200	1000	860	200	174	633	665
OD1000XOD250	1000	860	250	219	739	658
OD1000XOD315	1000	860	315	275	739	688
OD1000XOD400	1000	860	400	348	844	672
OD1000XOD500	1000	860	500	432	950	708
OD1000XOD630	1000	860	630	546	1055	748
OD1000XOD800	1000	860	800	693	1583	775

WELDED TEE REDUCER						
HDPE "OD"						
TEE REDUCER	DIMENSIONS					
	OD	ID	OD1	ID1	L	L1
	(mm)	(mm)	(mm)	(mm)	(mm)	(mm)
OD125XOD110	125	108	110	93	354	193
OD160XOD125	160	137	125	108	430	203
OD200XOD125	200	174	125	108	460	225
OD250XOD125	250	219	125	108	461	248
OD315XOD125	315	275	125	108	483	281
OD400XOD110	400	348	110	93	447	331
OD400XOD125	400	348	125	108	487	323
OD400XOD160	400	348	160	137	487	353
OD400XOD200	400	348	200	174	528	365
OD400XOD250	400	348	250	219	609	358
OD400XOD315	400	348	315	275	650	388
OD500XOD110	500	432	110	93	474	381
OD500XOD125	500	432	125	108	474	373
OD500XOD160	500	432	160	137	527	403
OD500XOD200	500	432	200	174	580	415
OD500XOD250	500	432	250	219	632	408
OD500XOD315	500	432	315	275	685	438
OD500XOD400	500	432	400	348	791	422
OD630XOD110	630	546	110	93	527	446
OD630XOD125	630	546	125	108	593	438
OD630XOD160	630	546	160	137	593	468
OD630XOD200	630	546	200	174	659	480
OD630XOD250	630	546	250	219	725	473
OD630XOD315	630	546	315	275	791	503
OD630XOD400	630	546	400	348	857	487
OD630XOD500	630	546	500	432	923	523

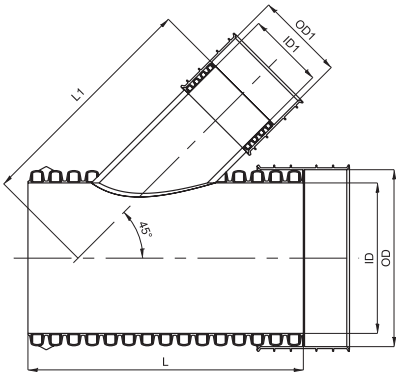

WELDED Y-BRANCH REDUCER						
HDPE "OD"						
Y-BRANCH REDUCER	DIMENSIONS					
	OD	ID	OD1	ID1	L	L1
	(mm)	(mm)	(mm)	(mm)	(mm)	(mm)
OD800XOD110	800	693	110	93	754	851
OD800XOD125	800	693	125	108	754	851
OD800XOD160	800	693	160	137	829	899
OD800XOD200	800	693	200	174	829	931
OD800XOD250	800	693	250	219	905	949
OD800XOD315	800	693	315	275	1056	1011
OD800XOD400	800	693	400	348	1131	1037
OD800XOD500	800	693	500	432	1282	1124
OD800XOD630	800	693	630	546	1433	1228
OD1000XOD110	1000	860	110	93	844	993
OD1000XOD125	1000	860	125	108	844	993
OD1000XOD160	1000	860	160	137	950	1040
OD1000XOD200	1000	860	200	174	950	1072
OD1000XOD250	1000	860	250	219	1055	1091
OD1000XOD315	1000	860	315	275	1161	1153
OD1000XOD400	1000	860	400	348	1266	1179
OD1000XOD500	1000	860	500	432	1372	1265
OD1000XOD630	1000	860	630	546	1583	1370
OD1000XOD800	1000	860	800	693	1899	1383

WELDEDY-BRANCH REDUCER						
HDPE "OD"						
Y-BRANCH REDUCER	DIMENSIONS					
	OD	ID	OD1	ID1	L	L1
	(mm)	(mm)	(mm)	(mm)	(mm)	(mm)
OD125XOD110	125	108	110	93	598	374
OD160XOD125	160	137	125	108	688	399
OD200XOD125	200	174	125	108	713	429
OD250XOD125	250	219	125	108	705	462
OD315XOD125	315	275	125	108	759	508
OD400XOD110	400	348	110	93	690	568
OD400XOD125	400	348	125	108	731	569
OD400XOD160	400	348	160	137	771	616
OD400XOD200	400	348	200	174	812	648
OD400XOD250	400	348	250	219	893	666
OD400XOD315	400	348	315	275	974	728
OD500XOD110	500	432	110	93	738	639
OD500XOD125	500	432	125	108	738	639
OD500XOD160	500	432	160	137	791	687
OD500XOD200	500	432	200	174	843	719
OD500XOD250	500	432	250	219	949	737
OD500XOD315	500	432	315	275	1001	799
OD500XOD400	500	432	400	348	1159	825
OD630XOD110	630	546	110	93	791	731
OD630XOD125	630	546	125	108	791	731
OD630XOD160	630	546	160	137	857	779
OD630XOD200	630	546	200	174	923	810
OD630XOD250	630	546	250	219	989	829
OD630XOD315	630	546	315	275	1120	891
OD630XOD400	630	546	400	348	1186	917
OD630XOD500	630	546	500	432	1318	1004

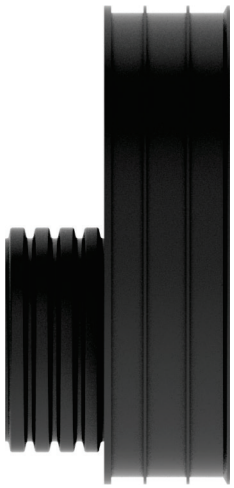

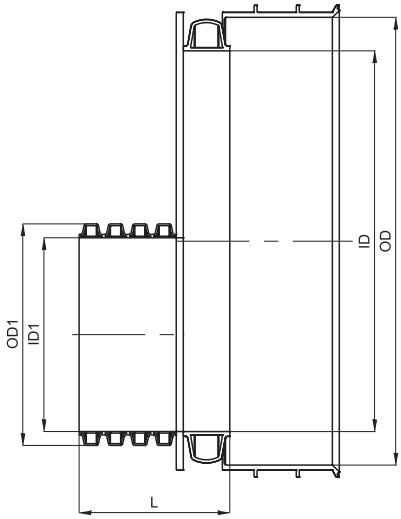

WELDED REDUCER					
HDPE "OD"					
REDUCER	DIMENSIONS				
	OD	ID	OD1	ID1	L
	(mm)	(mm)	(mm)	(mm)	(mm)
OD800XOD110	800	693	110	93	166
OD800XOD125	800	693	125	108	159
OD800XOD160	800	693	160	137	189
OD800XOD200	800	693	200	174	200
OD800XOD250	800	693	250	219	194
OD800XOD315	800	693	315	275	223
OD800XOD400	800	693	400	348	207
OD800XOD500	800	693	500	432	244
OD800XOD630	800	693	630	546	283
OD1000XOD110	1000	860	110	93	196
OD1000XOD125	1000	860	125	108	189
OD1000XOD160	1000	860	160	137	219
OD1000XOD200	1000	860	200	174	231
OD1000XOD250	1000	860	250	219	224
OD1000XOD315	1000	860	315	275	254
OD1000XOD400	1000	860	400	348	237
OD1000XOD500	1000	860	500	432	274
OD1000XOD630	1000	860	630	546	313
OD1000XOD800	1000	860	800	693	417

WELDED REDUCER					
HDPE "OD"					
REDUCER	DIMENSIONS				
	OD	ID	OD1	ID1	L
	(mm)	(mm)	(mm)	(mm)	(mm)
OD125XOD110	125	108	110	93	164
OD160XOD125	160	137	125	108	186
OD200XOD125	200	174	125	108	200
OD250XOD125	250	219	125	108	192
OD315XOD125	315	275	125	108	221
OD400XOD110	400	348	110	93	212
OD400XOD125	400	348	125	108	205
OD400XOD160	400	348	160	137	235
OD400XOD200	400	348	200	174	247
OD400XOD250	400	348	250	219	240
OD400XOD315	400	348	315	275	270
OD500XOD110	500	432	110	93	249
OD500XOD125	500	432	125	108	241
OD500XOD160	500	432	160	137	271
OD500XOD200	500	432	200	174	283
OD500XOD250	500	432	250	219	277
OD500XOD315	500	432	315	275	306
OD500XOD400	500	432	400	348	290
OD630XOD110	630	546	110	93	288
OD630XOD125	630	546	125	108	281
OD630XOD160	630	546	160	137	311
OD630XOD200	630	546	200	174	323
OD630XOD250	630	546	250	219	316
OD630XOD315	630	546	315	275	346
OD630XOD400	630	546	400	348	330
OD630XOD500	630	546	500	432	366

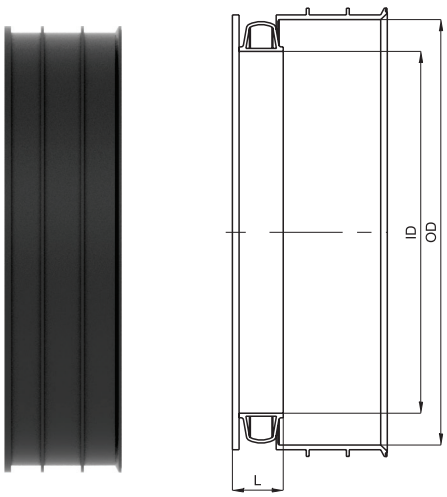

WELDED END CAP			
HDPE "OD"			
END CAP	DIMENSIONS		
	OD	ID	L
	(mm)	(mm)	(mm)
OD110	110	93	91
OD125	125	108	83
OD160	160	137	113
OD200	200	174	125
OD250	250	219	118
OD315	315	275	148
OD400	400	348	132
OD500	500	432	168
OD630	630	546	208
OD800	800	693	85
OD1000	1000	860	116

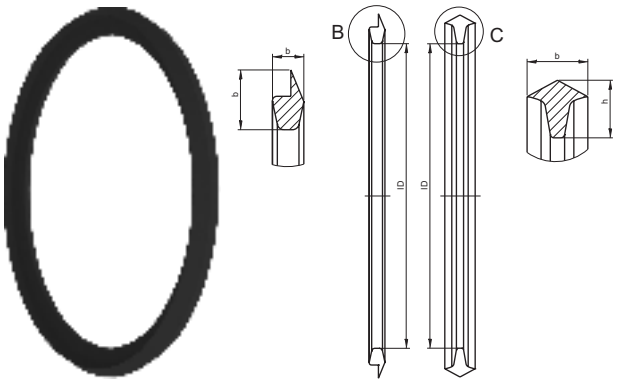

GASKET			
HDPE "OD"			
GASKET	DIMENSIONS		
	ID	b	h
	(mm)	(mm)	(mm)
OD 110	79	4,8	12
OD 125	79	4,8	12
OD 160	127	6,5	17,3
OD 200	160	14	15
OD 250	190	11	23
OD 315	251	17	25
OD 400	308	33,5	23,5
OD 500	370	42,5	32
OD 630	462	47	43,5
OD 800	610	54	54
OD 1000	750	65	69

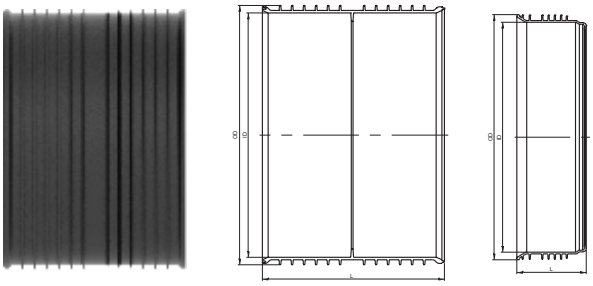

SOCKET			
HDPE "OD"			
SOCKET	DIMENSIONS		
	OD	ID	L
	(mm)	(mm)	(mm)
OD 110	126.0	111.6	140
OD 125	138.8	126.8	144
OD 160	178.1	162.1	200
OD 200	218.1	202.5	220
OD 250	273.0	253.0	220
OD 315	352.7	318.7	255
OD 400	432.5	404.5	225
OD 500	540.5	505.5	255
OD 630	683.8	636.8	320
OD 800 injection	856.0	808.0	237
OD 800 rotomold	902.0	808.0	245
OD 1000 injection	1066.0	1010.0	330
OD 1000 rotomold	1120.0	1010.0	324

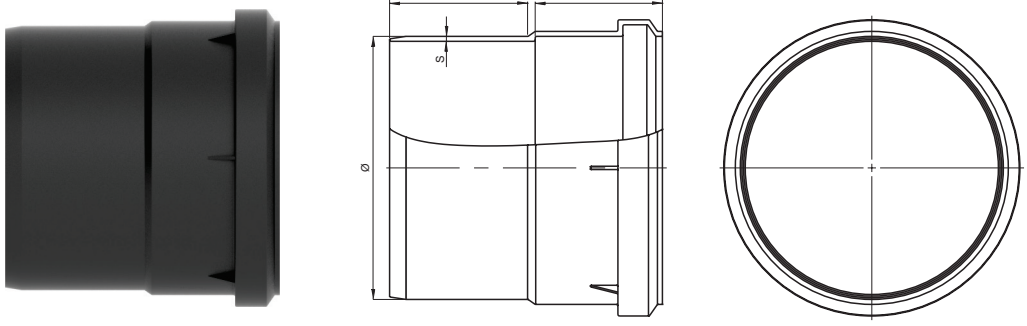

FLEX ADAPTER					
HDPE "OD"					
FLEX ADAPTER	DIMENSIONS				
	L	L1	L2	Ø	S
	(mm)	(mm)	(mm)	(mm)	(mm)
OD 110	800	67	71	109	3
OD 160	800	87	80	159	3.5
OD 200	800	87	101	199	4.5

CERTIFICATES

IQNet
THE INTERNATIONAL CERTIFICATION NETWORK
CERTIFICATE
KONTI HIDROPLAST doo
Industriska b.b., 1480 Gevgelija, Macedonia
ENVIRONMENTAL MANAGEMENT SYSTEM
ISO 14001:2004

IQNet
THE INTERNATIONAL CERTIFICATION NETWORK
CERTIFICATE
KONTI HIDROPLAST DOO
Industriska b.b., 1480 Gevgelija, Macedonia
OCCUPATIONAL HEALTH AND SAFETY MANAGEMENT SYSTEM
BS OHSAS 18001:2007

IQNet
THE INTERNATIONAL CERTIFICATION NETWORK
CERTIFICATE
KONTI HIDROPLAST doo
Industriska b.b., 1480 Gevgelija, Macedonia
QUALITY MANAGEMENT SYSTEM
ISO 9001:2008

qualityaustria
CERTIFICATE
KONTI HIDROPLAST DOO
OCCUPATIONAL HEALTH AND SAFETY MANAGEMENT SYSTEM
BS OHSAS 18001:2007

qualityaustria
CERTIFICATE
KONTI HIDROPLAST doo
ENVIRONMENTAL MANAGEMENT SYSTEM
ISO 14001:2004

qualityaustria
CERTIFICATE
KONTI HIDROPLAST doo
QUALITY MANAGEMENT SYSTEM
ISO 9001:2008

EXACT
„СЕРТИФИКАЦИЯ" ЕАД
CERTIFICATE
№ 0303 - II
Product
Trade mark
Manufacturer
Abide by
EN 13476-3:2007+A1:2009

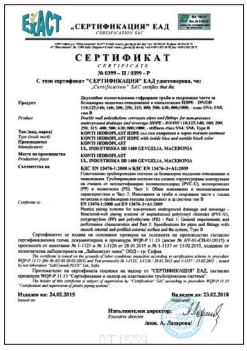
EXACT
„СЕРТИФИКАЦИЯ" ЕАД
СЕРТИФИКАТ
№ 0399 – II / 0399 - P
С този сертификат "СЕРТИФИКАЦИЯ" ЕАД удостоверява, че:
Продукт
Търговска марка
Производител
Местонахождение на производителя
Съответства на
EN 13476-3:2007+A1:2009

EXACT
„СЕРТИФИКАЦИЯ" ЕАД
CERTIFICATE
№ 0304 - P
„Certification" SAC certifies that the
Product
Type (trade mark)
Manufacturer
Production place
Conforms to
EN 13476-3:A1:2009

EXACT
„СЕРТИФИКАЦИЯ" ЕАД
СЕРТИФИКАТ
№ 0305 – II / 0305 - P
С този сертификат "СЕРТИФИКАЦИЯ" ЕАД удостоверява, че:
Продукт
Търговска марка
Производител
Местонахождение на производителя
Съответства на
EN 13476-3:A1:2009

EXACT
„СЕРТИФИКАЦИЯ" ЕАД
СЕРТИФИКАТ
№ 0393 – II / 0393 - P
С този сертификат "СЕРТИФИКАЦИЯ" ЕАД удостоверява, че:
Продукт
Търговска марка
Производител
Местонахождение на производителя
Съответства на
EN 13476-3:2009+A1:2013

EXACT
„СЕРТИФИКАЦИЯ" ЕАД
СЕРТИФИКАТ
№ 0394 - P
С този сертификат "СЕРТИФИКАЦИЯ" ЕАД удостоверява, че:
Продукт
Търговска марка
Производител
Местонахождение на производителя
Съответства на
EN 13476-3:A1:2009

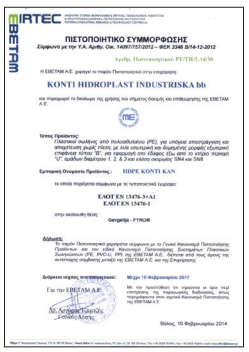
IRTEC
ПИЕТОПОИНТИКО ΣΥΜΜΟΡΦΩΣΗΣ
Σύμφωνα με την Υ.Α. Αριθμ. Οικ. 14097/737/2012 – ΦΕΚ 2348 Β/14-12-2012
ΕΙΔΕΤΗΜ Α.Ε. χορηγεί το παρόν Πιστοποιητικό στην εταιρεία
KONTI HIDROPLAST INDUSTRISKA bb
ΕΛΟΤ ΕΝ 13476-3:Α1
ΕΛΟΤ ΕΝ 13476-1
HDPE KONTI KAN
Βόλος, 10 Φεβρουαρίου 2014

Institut IGH d.d.
IGH Cert
CERTIFIKAT O STALNOSTI SVOJSTAVA
1/05-ZGP-2065
KONTI KAN PP (PPHA) cijevi i spojnice za netlačnu podzemnu odvodnju i kanalizaciju (cijevni sustavi sa strukturiranom stijenkom) tip B
DN/OD 110 - DN/OD 1200 (DN4, SN8)
DN/ID 100 - DN/ID 1200 (DN4, SN8)
Hidrocom d.o.o.
A.Mihanovića bb, HR-33405 Pitomača
Konti Hidroplast DOOEL
ul.Industriska bb, MK-1480 Gevgelija
HRN EN 13476-1:2007 i HRN EN 13476-3:2009
proizvod ispunjava sve gore propisane zahtjeve.
Zagreb, 24. srpanj 2014.

Institut IGH d.d.
IGH Cert
CERTIFIKAT O STALNOSTI SVOJSTAVA
1/05-ZGP-2067
KONTI KAN PE (PEHD) cijevi i spojnice za netlačnu podzemnu odvodnju i kanalizaciju (cijevni sustavi sa strukturiranom stijenkom) tip B
DN/OD 110 - DN/OD 1200 (DN4, SN8)
DN/ID 100 - DN/ID 1200 (DN4, SN8)
Hidrocom d.o.o.
A.Mihanovića bb, HR-33405 Pitomača
Konti Hidroplast DOOEL
ul.Industriska bb, MK-1480 Gevgelija
HRN EN 13476-1:2007 i HRN EN 13476-3:2009
proizvod ispunjava sve gore propisane zahtjeve.
Zagreb, 24. srpanj 2014.

Institut IGH d.d.
IGH Cert
CERTIFIKAT O STALNOSTI SVOJSTAVA
1/05-ZGP-1732
KONTI KAN SPIRAL PP I PE
Cijevi i spojnice za netlačnu podzemnu odvodnju i kanalizaciju, tip A2
DN/OD 1100 - DN/OD 3000 (SN4, SN8)
Hidrocom d.o.o.
A.Mihanovića bb, HR-33405 Pitomača
Konti Hidroplast DOOEL
ul.Industriska bb, MK-1480 Gevgelija
HRN EN 13476-1:2007 i HRN EN 13476-2:2007
proizvod ispunjava sve gore propisane zahtjeve.
Zagreb, 4. rujan 2013.

Autorizovaná osoba 227
Výzkumný ústav pozemních staveb - Certifikační společnost, a.r.s.
ČERTIFIKÁT VÝROBKU
Trubky KONTI KAN PP-HM
SN8 z polypropylenu se strukturovanou stěnou dvoupásmové
DN 200 - DN 1200, potrubí pro gravitační tlakovou kanalizaci
PLASTMONT BUREŠ, s.r.o.
KONTI HIDROPLAST

Authorized Body 227
Building Research Institute in Prague – Certification Company, Ltd.
PRODUCT CERTIFICATE
Pipes KONTI KAN PP-HM
SN8 polypropylene structured-wall double-walled
DN 200 - DN 1200, jointed with rubber sealing rings
PLASTMONT BUREŠ, s.r.o.
KONTI HIDROPLAST

LABORATORY TESTING

MELT MASS-FLOW RATE

LONGITUDINAL REVERSION

IMPACT STRENGTH

RING STIFFNESS/FLEXIBILITY

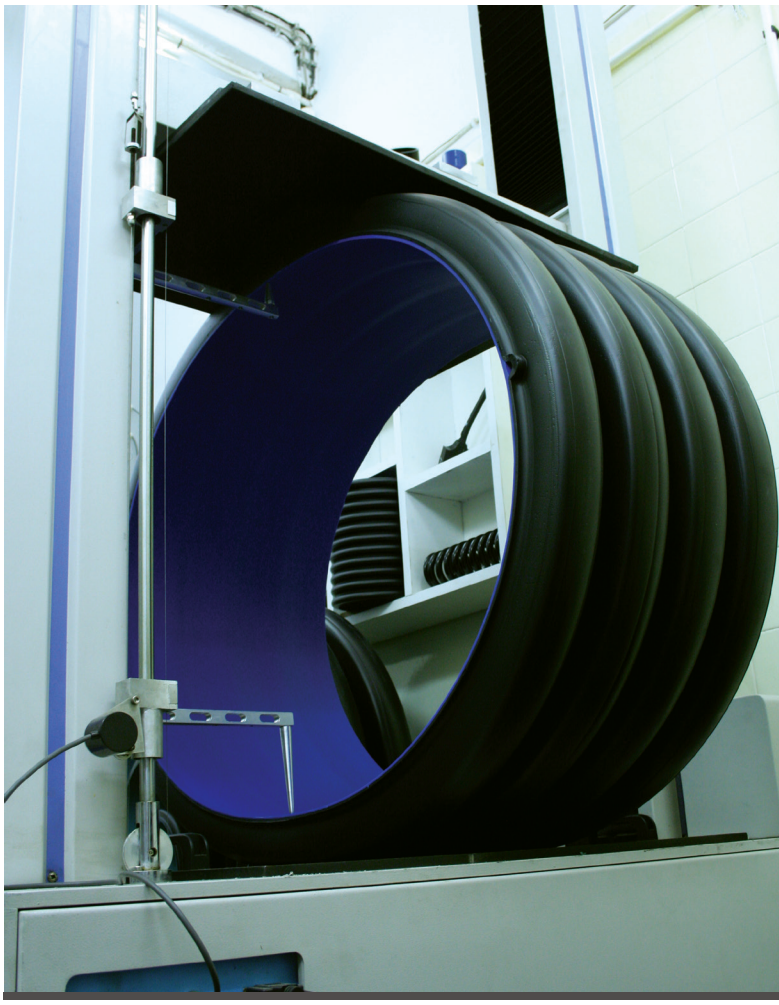

TIGHTNESS OF ELASTOMETRIC RING SEAL JOINT

KONTI HIDROPLAST®

MACEDONIA
1480 Gevgelija, Industriska bb

+389 34 212 064 +389 34 215 225
+389 34 211 757 +389 34 215 226

+389 34 211 964

contact@konti-hidroplast.com.mk
hidroplast@t-home.mk

www.konti-hidroplast.com.mk

DVGW

CERTIFIED IQNet MANAGEMENT SYSTEM

Certified Quality System ISO 9001 Quality Assured Firm

qualityaustria
SYSTEM CERTIFIED
ISO 9001:2008 No. 01442/0
ISO 14001:2004 No. 00211/0